SKH041(13)

IV STAND



SAIKANG Medical

Healthier your life

SKH041(13)

FEATURES AND HIGHLIGHTS

Technical parameters

Inner tube	Ø19mm
Outer tube	Ø25mm
Bottom tube	Ø32mm
Overall height range	1470–1850 ±10mm
IV pump tray	Size 210×230 ±10mm
Height from floor to pump tray	930 ±10mm
Base diameter	50cm
Load capacity of IV hooks	5kg

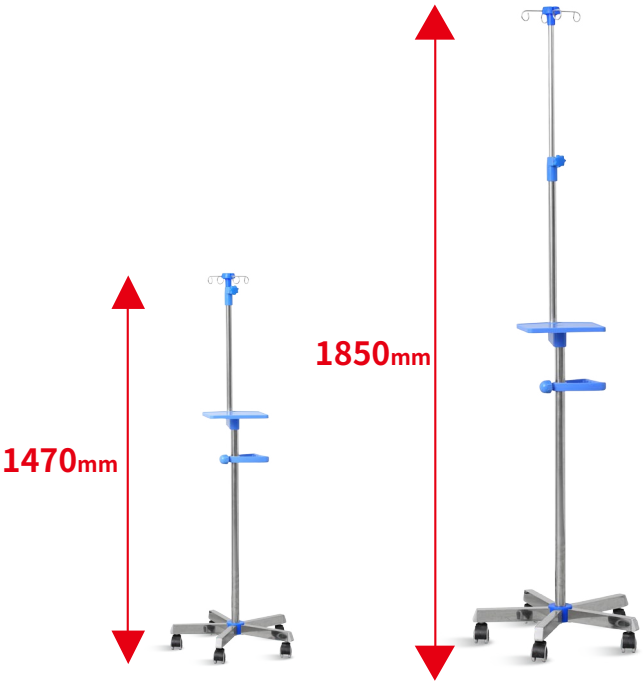

Design
The appearance design is simple and elegant, lightweight, and easy to move.

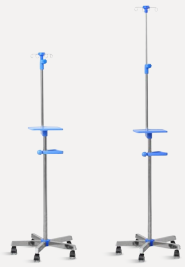

Material
The main body is made of high-quality 201 stainless steel tubes, with good load-bearing capacity and not easily prone to rust.



Base
Stainless steel base is equipped with internal weights to provide stability and prevent tipping.
5*2-inch swivel casters, easy to move, and lockable.



Hooks
Top-mounted 4 chrome-plated hooks with high load-bearing capacity.



Tray
ABS square tray, convenient for placing items.



Handle
Adjustable handle design, height adjustment, easy to move.





CONSTANT INNOVATION

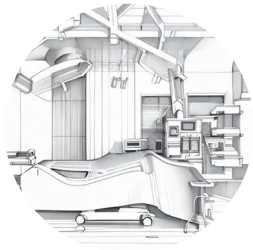

Design



Research



Manufacturing



Maintenance



Service

WORLDWIDE BRANCHES

South America Branch

Saikang Medical Technology, Inc
W3400 Corrientes, Argentina
TEL: +55 (11) 2758-0438
Rua Universal, Hollywood,
São Bernardo do Campo,
Brazil
TEL: +55 (11) 2758-0438

East Africa Branch

Saikang Medical Technology Ltd
Mezzanine Floor, Taj Tower,
upper hill, nairobi, Kenya
TEL: +254714084806

South East Asia Branch

Saikang Medical (Philippines) Company Limited
Manila, The Philippines
TEL: +63 953 044 7864

US Branch

Healthward Technology, INC
17800 CASTLETON ST STE 180.
CITY OF INDUSTRY CA 91748
TEL: +1 (603)416-3063

Russia Branch

LLC 'SAIKANG'
454004, Russian Federation,
Chelyabinsk,
Universitetskaya
Naberezhnaya, Russia
TEL: +7 (919)300-00-06

Mid East Branch

Saikang Medical Supplies (Mid East) LLC
Musaffah
P.O Box 53200, Abu Dhabi,
UAE
Tel: +971 585710652

SAIKANG Medical

Jiangsu Saikang Medical Equipment Co., Ltd.
STOCK CODE: 870098

No. 35, Lehong Road · Zhangjiagang (Jiangsu) · China
+86 18021231901 · 24/7
export@saikangmedical.com
www.saikangmedical.com

Company video

General catalogue